REVISIONS

EFFECTIVITY	REV	DESCRIPTION	DATE	APPROVED
FUTURE	A	FIRST RELEASE ISSUE	4 / 17 / 09	
FUTURE	B	ADDED GRAIN SPACER O-RINGS	11 / 16 / 09	

NOTES:

1. MOTOR ASSEMBLY SHOWN WITH SPECIFIED MOTOR HARDWARE & RELOAD KIT.

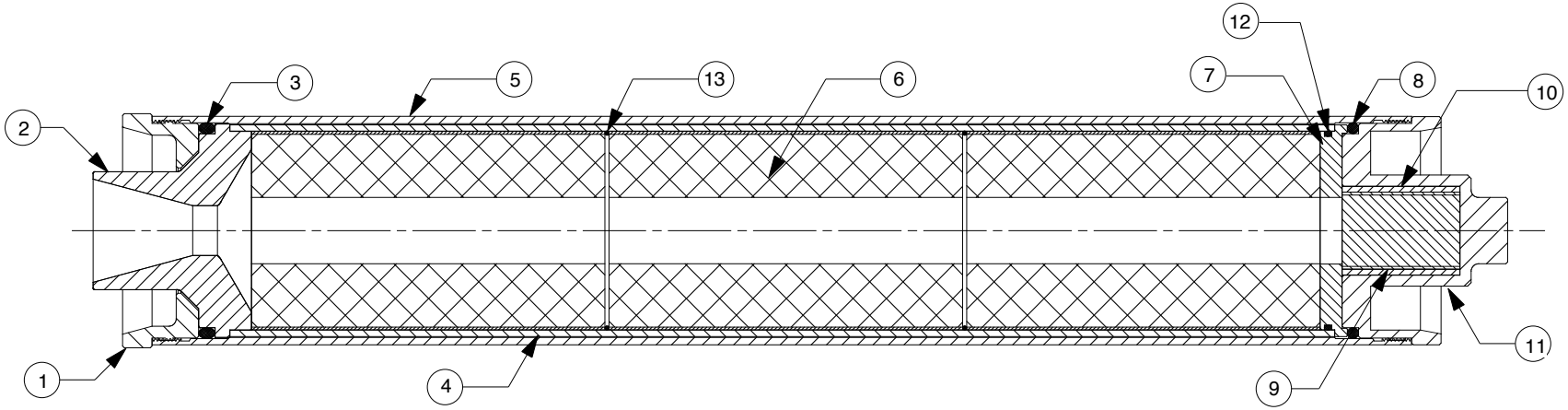

QTY	PART NUMBER	DESCRIPTION	ITEM
2	00042	GRAIN SPACER O-RINGS (3-3/8" O.D. X 1/16") 042	13
1	00151	FWD SEAL DISK O-RING (3-3/8" O.D. X 3/32") 151	12
1	98FCP	FORWARD CLOSURE (PLUGGED)	11
1	03081	SMOKE CHG INSULATOR (1.5" O.D. X 2.0")	10
1	03288	SMOKE CHARGE(1.305"O.D. X 2.0")	9
1	00339	FORWARD O-RING (3.625" O.D. X 3/16") 339	8
1	98FSD	FORWARD SEAL DISK	7
3	03618-10	PROPELLANT GRAINS (3.37" O.D. X 6.00")	6
1	9876C	CASE	5
1	03040-3	PHENOLIC LINER (3.592" O.D. X 18.750")	4
1	00339	AFT O-RING (3.625" O.D. X 3/16") 339	3
1	01800-4(M)	NOZZLE (KLMN 98MM) .844" I.D. /1.75" EXIT	2
1	98ACC	AFT CLOSURE	1

LIST OF MATERIAL

SUPPLIER DATA	RELOAD KIT IDENTIFICATION	
AEROTECH DIV. RCS RMC INC.	13184P	M1845NT-P
	PART NUMBER	DESCRIPTION

UNLESS OTHERWISE SPECIFIED DIMENSIONS ARE IN INCHES

.XX +/- .010	.XXX +/- .005	ANGLES +/- 2 deg.

MATERIAL

NOTED

FINISH

CONTRACT NUMBER

PREP	G. ROSENFIELD	4 / 09
CHKR		
APVD		
APVD		

ROCKET MOTOR COMPONENTS, INC.
2113 W. 850 N. Street
Cedar City, Utah 84720
(435) 865-7100 (Ph)
(435) 865-7120 (Fax)

HP 98/7680 MOTOR WITH M1845NT-P RELOAD KIT

SIZE A | NUMBER **ASSY DWG**

SCALE 1 / 3 | SHEET 1 OF 1